No. 777,291. PATENTED DEC. 13, 1904.

R. LOVE.

FERTILIZER DISTRIBUTER.

APPLICATION FILED JAN. 22, 1903.

NO MODEL. 2 SHEETS—SHEET 1.

Fig. 1.

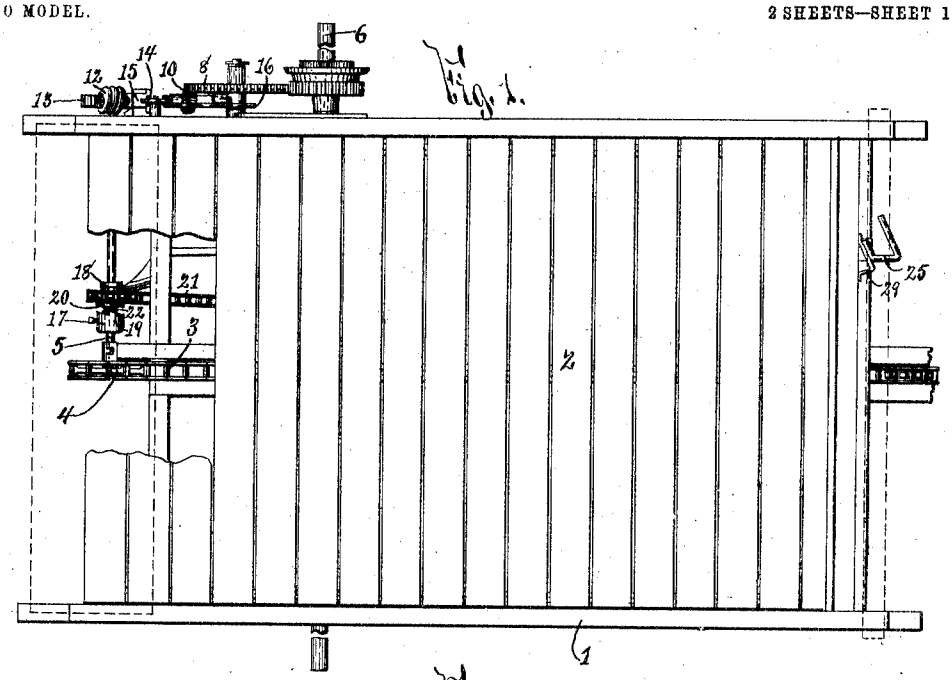

Fig. 2.

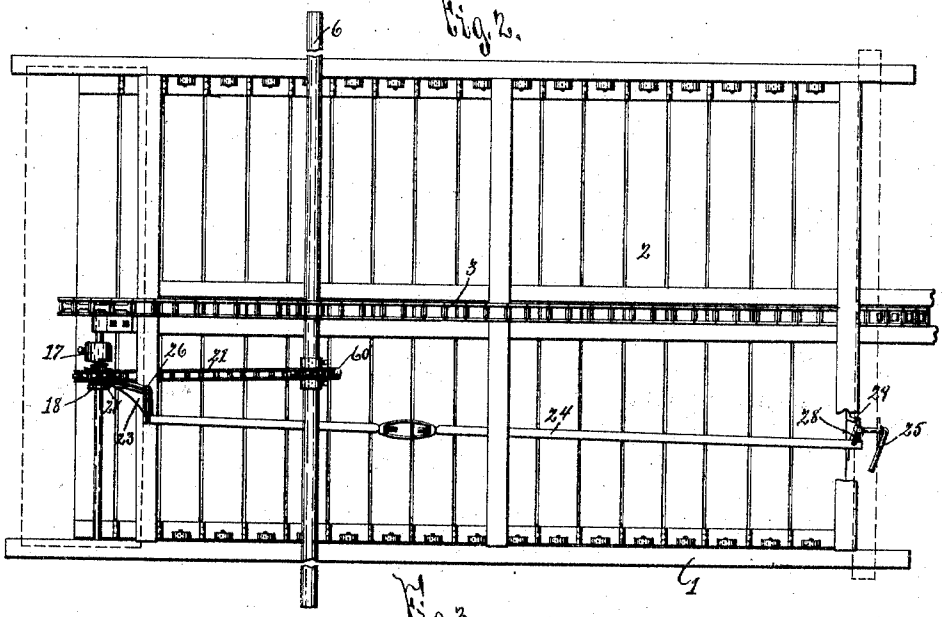

Fig. 3.

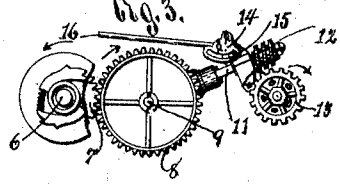

WITNESSES:

Chas. J. Foner.

Herman McGann.

INVENTOR

Robert Love

BY

Seyx Parsons

ATTORNEYS

No. 777,291. PATENTED DEC. 13, 1904.

R. LOVE.

FERTILIZER DISTRIBUTER.

APPLICATION FILED JAN. 22, 1903.

NO MODEL. 2 SHEETS—SHEET 2.

Fig. 4.

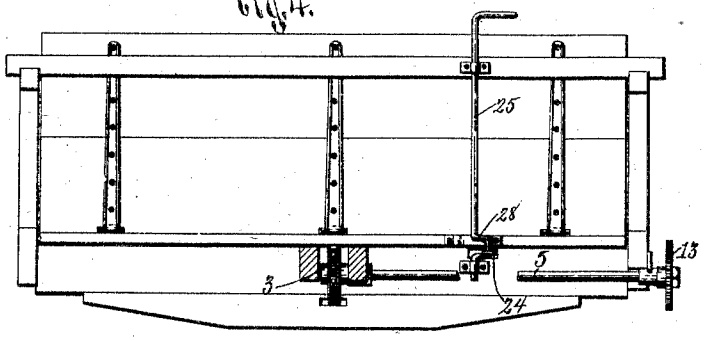

Fig. 5.

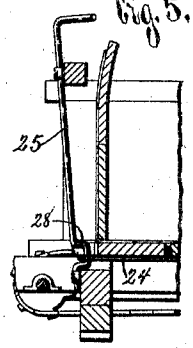

Fig. 6.

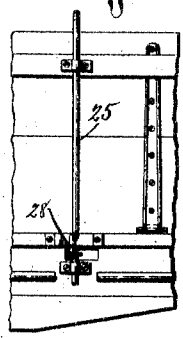

Fig. 7.

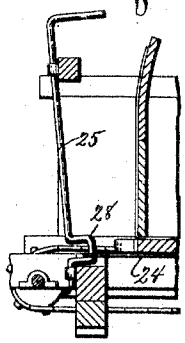

Fig. 8.

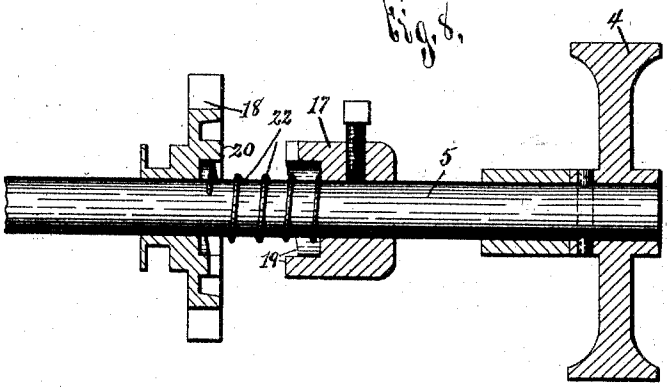

WITNESSES:

Chas. J. Foner.

Herman McGann.

INVENTOR

Robert Love

BY

Key & Parsons

ATTORNEYS

No. 777,291. Patented December 13, 1904.

UNITED STATES PATENT OFFICE.

ROBERT LOVE, OF SYRACUSE, NEW YORK, ASSIGNOR TO KEMP & BURPEE MANUFACTURING COMPANY, OF SYRACUSE, NEW YORK, A CORPORATION OF NEW YORK.

FERTILIZER-DISTRIBUTER.

SPECIFICATION forming part of Letters Patent No. 777,291, dated December 13, 1904.

Application filed January 22, 1903. Serial No. 140,076. (No model.)

To all whom it may concern:

Be it known that I, ROBERT LOVE, of Syracuse, in the county of Onondaga and State of New York, have invented a certain new and useful Fertilizer-Distributer, of which the following is a specification.

My invention has for its object the production of a fertilizer-distributer which is particularly simple in construction and efficient in operation; and to this end it consists in the combinations and devices hereinafter set forth, and pointed out in the claims.

In describing this invention reference is had to the accompanying drawings, in which like characters designate corresponding parts in all the views.

Figure 1 is a top plan, partly broken away, of a portion of a fertilizer-distributer embodying a preferable construction of my invention. Fig. 2 is an inverted plan of the greater number of the parts seen in Fig. 1. Fig. 3 is a detail view of the power-transmitting means for feeding the movable bottom rearwardly. Fig. 4 is a front elevation, partly in section, of the upper portion of the fertilizer-distributer. Figs. 5, 6, and 7 are detail views of the manually-operated member for controlling the forward feeding of the movable bottom and contiguous parts of the machine. Fig. 8 is a detail view of a portion of the shaft for actuating the movable bottom and the power-transmitting members provided thereon.

The receptacle 1 for the fertilizer is of any desirable form, size, and construction and is provided with a movable bottom 2, consisting of transverse slats connected by an endless chain 3, which is driven by a sprocket-wheel 4, mounted on a shaft 5 at the rear end of the receptacle 1. Motion is transmitted to the shaft 5 from a driving axle or shaft 6 by any suitable power-transmitting means for feeding the bottom 2 rearwardly, here shown in Figs. 1 and 3 as connected directly to said shaft 5 and axle 6 and as comprising a gear-wheel 7, fixed to the shaft 6, an intermediate gear 8, mounted on a spindle 9 and meshing with the gear 7, a bevel-gear 10, provided on one end of a shaft 11 and meshing with teeth on the inner side of the gear 8, a worm 12, provided on the other end of the shaft 11, and a worm-wheel 13, fixed on the outer end of the shaft 5. The worm 12 is forced into and out of engagement with the worm-wheel 13 by any suitable means, as a pivoted lever 14, formed with a cam-shaped slot for receiving a shoulder 15, provided on a sleeve encircling the shaft 11. Said lever 14 is forced to and from its operative position by a rod 16, having one end connected to the lever 14 and its other end connected to a suitable manually-operated piece unnecessary to illustrate and describe herein. When the lever 14 and the rod 16 are drawn forwardly into their position illustrated in Fig. 3, the worm 12 is disengaged from the worm-wheel 13 and no motion is transmitted from the driving-axle 6 to the shaft 5 for feeding the bottom 2 rearwardly. Said lever 14 and rod 16 thus disconnect from the shaft 5 and its worm-wheel 13 the power-transmitting means connecting said worm-wheel with the driving-axle 6 for moving the bottom 2 rearwardly and form means for preventing the transmission of motion to the shaft 5 by said power-transmitting means.

My fertilizer-distributer is provided with means for returning the movable bottom 2 forwardly and for controlling the forward movement thereof. The means for returning the movable bottom forwardly is connected directly to the driving-axle 6 and the shaft 5, is independent of the means between said axle and shaft for feeding the bottom rearwardly, and consists of a power-transmitting member 17, revoluble with the shaft 5, a power-transmitting member 18, loose on the shaft 5 and normally revoluble forwardly independently of said shaft, clutch-faces 19 20, provided, respectively, on the power-transmitting members 17 18, a sprocket-wheel 60, fixed to the driving-axle 6, and power-transmitting means

21, as a sprocket-chain, normally connecting the member 18 with said sprocket-wheel 60. A spring 22, mounted on the shaft 5, normally separates the clutch-faces 19 20, and thus forms means for preventing the transmission of motion to the shaft 5 from the power-transmitting means connecting said shaft with the driving-axle 6 for moving the bottom forwardly.

The means for controlling the forward movement of the bottom 2 consists of a lever 23, a movable part or link 24, and a manually-operated member, as a lever 25. As best seen in Fig. 2, the lever 23 is pivoted at 26 to the bottom of the frame of the receptacle 1, and one end thereof is provided with a fork 27, connected to the power-transmitting member 18, and its other end is pivoted to the rear extremity of the movable part or link 24. The front extremity of said movable part or link is pivoted to a substantially horizontal crank-arm 28, provided on the manually-operated lever 25, which is arranged in a substantially vertical plane at the front end of the receptacle 1. When the lever 25 is in its inoperative position, as illustrated in Figs. 1, 2, and 5, the spring 22 separates the clutch-faces 19 20 of the power-transmitting members 17 18 and holds the levers 23 25 in their inoperative positions. If it is desired to start the forward movement of the bottom 2, the lever 25 is rocked by hand from its position shown in Figs. 1, 2, and 5 to the position indicated in Figs. 6 and 7, whereupon the movable part or link 24 and the lever 23 set or engage the clutch-faces 19 20 of the power-transmitting members 17 18 and are held or locked in their operative position by the arm 28, which prevents the transmission of motion from the member 18 to the lever 25 for moving the lever from its adjusted position, said arm being then arranged substantially in line with the movable part or link 24 or, in other words, in a plane forming, essentially, a continuation of a line extending lengthwise of the movable part 24 between the side edges thereof. The means between the levers 23 25 thus includes dead-center-locking mechanism.

The forward end of the bottom 2 is provided with a cam 29, which engages the arm 28 as the movable bottom reaches the limit of its forward movement and rocks the outer end of said arm forwardly thus forcing the lever 25 from its locking or operative position and permitting the spring 22 to disengage the clutch-faces 19 20.

The construction and operation of my fertilizer-distributer will now be readily understood upon reference to the foregoing description and the accompanying drawings, and it will be noted that more or less change may be made in the component parts thereof without departing from the spirit of my invention.

Having thus fully described my invention, what I claim as new, and desire to secure by Letters Patent, is—

1. In a fertilizer-distributer, the combination of a movable bottom, a shaft connected to the movable bottom, a driving-axle, power-transmitting means connected directly to the shaft and to the driving-axle for feeding the bottom rearwardly, means for disconnecting the power-transmitting means from the shaft, power-transmitting means independent of the first-mentioned power-transmitting means and connected to the shaft for feeding the bottom forwardly, means for preventing the transmission of motion to the shaft from the second-mentioned power-transmitting means, and means for setting the second-mentioned power-transmitting means to transmit motion to the shaft, substantially as and for the purpose described.

2. In a fertilizer-distributer, the combination of a movable bottom, a shaft connected to the movable bottom and provided with a power-transmitting wheel for revolving said shaft, a driving-axle having a power-transmitting wheel, power-transmitting means connected directly to the power-transmitting wheels for feeding the bottom rearwardly, means for disconnecting the power-transmitting means from the shaft, power-transmitting means independent of the first-mentioned power-transmitting means and connected to the shaft for feeding the bottom forwardly, means for preventing the transmission of motion to the shaft from the second-mentioned power-transmitting means, and means for setting the second-mentioned power-transmitting means to transmit motion to the shaft, substantially as and for the purpose specified.

3. In a fertilizer-distributer, the combination of a movable bottom, a shaft connected to the movable bottom and provided with a plurality of power-transmitting wheels for revolving said shaft, a driving-axle having a plurality of power-transmitting wheels, power-transmitting means connected directly to one of the power-transmitting wheels on the shaft and to one of said wheels on the driving-axle for feeding the bottom rearwardly, means for disconnecting the power-transmitting means from said one of the power-transmitting wheels on the shaft, power-transmitting means connected to the other power-transmitting wheel on the shaft and to the other of said wheels on the driving-axle for feeding the bottom forwardly, means for preventing the transmission of motion to the movable bottom from the second-mentioned power-transmitting means, and means connected to the second-mentioned power-transmitting means for setting the same to transmit motion to the movable bottom, substantially as and for the purpose set forth.

4. In a fertilizer-distributer, the combination of a movable bottom, a shaft connected to the movable bottom, a driving-axle, power-transmitting means connected directly to the shaft and to the driving-axle for feeding the bottom rearwardly, means for disconnecting the power-transmitting means from the shaft, a power-transmitting member loosely mounted on the shaft, means for normally connecting the driving-axle to the power-transmitting member and revolving the same forwardly, a power-transmitting member mounted on the shaft and normally revoluble therewith, means for preventing the transmission of motion from one power-transmitting member to the other, and means for operatively connecting the power-transmitting members, substantially as and for the purpose described.

5. In a fertilizer-distributer, the combination of a movable bottom, a shaft connected to the movable bottom and provided with a plurality of power-transmitting wheels for revolving said shaft, a driving-axle having a plurality of power-transmitting wheels, power-transmitting means connected directly to one of the power-transmitting wheels on the shaft and to one of said wheels on the driving-axle for feeding the bottom rearwardly, means for disconnecting the power transmitting means from said one of the power-transmittting wheels on the shaft, a power-transmitting member loosely mounted on the shaft, means for normally connecting the other of said wheels on the axle to the power-transmitting member and revolving the same forwardly, means for preventing the transmission of motion to said other of the power-transmitting wheels on the shaft from the power-transmitting member loosely mounted on the shaft, and means for operatively connecting said power-transmitting member to said other wheel on the shaft, substantially as and for the purpose specified.

6. In a fertilizer-distributer, the combination of a movable bottom, power-transmitting means for feeding the bottom rearwardly, power-transmitting means for feeding the bottom forwardly, means for preventing the transmission of motion to the movable bottom from the second-mentioned power-transmitting means, and means for setting the second-mentioned power-transmitting means to transmit motion to the movable bottom and for locking the same in said position including a movable part, a manually-operated member, and connections for actuating the movable part from said manually-operated member, substantially as described.

7. In a fertilizer-distributer, the combination of a movable bottom, a shaft connected to the movable bottom and provided with a plurality of power-transmitting wheels for revolving said shaft, a driving-axle having a plurality of power-transmitting wheels, power-transmitting means connected directly to one of the power-transmitting wheels on the shaft and to one of said wheels on the driving-axle for feeding the bottom rearwardly, means for disconnecting the power-transmitting means from said one of the power-transmitting wheels on the shaft, a power-transmitting member loosely mounted on the shaft, means for normally connecting the other of said wheels on the axle to the power-transmitting member and revolving the same forwardly, means for preventing the transmission of motion to said other of the power-transmitting wheels on the shaft from the power-transmitting member loosely mounted on the shaft, a movable part for forcing said power-transmitting member into operative engagement with the power-transmitting wheel coacting therewith, a rocking lever having a crank extending therefrom, and connections coacting with the movable part and the crank of said lever for actuating the movable part and for preventing the transmission of motion from the movable part to move the lever on its axis from the position assumed by said lever during the movement of the bottom forwardly by said power-transmitting member, substantially as and for the purpose described.

8. In a fertilizer-distributer, the combination of a movable bottom, a driving-axle, power-transmitting means connected to the movable bottom and to the driving-axle for feeding the bottom rearwardly, means for preventing the transmission of motion to the movable bottom from the power-transmitting means, power-transmitting means connected to the movable bottom and to the driving-axle for feeding the bottom forwardly, means for preventing the transmission of motion to the movable bottom from the second-mentioned power-transmitting means, a movable part for setting the second-mentioned power-transmitting means to transmit motion to the movable bottom, a rocking lever, and a crank-arm on the lever for actuating the movable part, said crank-arm being movable into a plane forming essentially a continuation of a line extending lengthwise of the movable part between the side edges thereof and thereby locking said movable part in position, substantially as and for the purpose specified.

9. In a fertilizer-distributer, the combination of a movable bottom, a driving-axle, power-transmitting means connected to the movable bottom and to the driving-axle for feeding the bottom rearwardly, means for preventing the transmission of motion to the movable bottom from the power-transmitting means, power-transmitting means connected to the movable bottom and to the driving-axle for feeding the bottom forwardly, means for preventing the transmission of motion to the

movable bottom from the second-mentioned power-transmitting means, a movable part for setting the second-mentioned power-transmitting means to transmit motion to the movable bottom, and a substantially upright manually-operated lever having a substantially horizontal crank-arm for actuating the movable part and locking the same in position, substantially as and for the purpose set forth.

10. In a fertilizer-distributer, the combination of a movable bottom, a driving-axle, a shaft connected to the movable bottom, power-transmitting means connected to the driving-axle and to the shaft for feeding the bottom rearwardly, means for preventing the transmission of motion to the shaft from the power-transmitting means, a power-transmitting member loosely mounted on the shaft, means for normally connecting the driving-axle to the power-transmitting member and revolving the same forwardly, a second power-transmitting member mounted on the shaft and normally revoluble therewith, means for preventing the transmission of motion from one power-transmitting member to the other, a movable part for operatively connecting the power-transmitting members, and a substantially upright manually-operated lever having a substantially horizontal crank-arm for actuating the movable part and locking the same in position, substantially as and for the purpose described.

11. In a fertilizer-distributer, the combination of a movable bottom, a driving-axle, a shaft connected to the movable bottom, power-transmitting means connected to the driving-axle and to the shaft for feeding the bottom rearwardly, means for preventing the transmission of motion to the shaft from the power-transmitting means, power-transmitting members, one being loosely mounted on the shaft and the other being fixed thereto, means for normally connecting the driving-axle to the power-transmitting member loosely mounted on the shaft, a spring on the shaft for normally disengaging the power-transmitting members, a movable part for operatively connecting the power-transmitting members, and a rocking lever having a crank-arm for actuating the movable part, said crank-arm being movable into a plane forming essentially a continuation of a line extending lengthwise of the movable part between the side edges thereof and thereby locking said movable part in position, substantially as and for the purpose specified.

12. In a fertilizer-distributer, the combination of a movable bottom, a driving-axle, power-transmitting means connected to the movable bottom and to the driving-axle for feeding the bottom rearwardly, means for preventing the transmission of motion to the movable bottom from the power-transmitting means, power-transmitting means connected to the movable bottom and to the driving-axle for feeding the bottom forwardly, means for preventing the transmission of motion to the movable bottom from the second-mentioned power-transmitting means, a movable part for setting the second-mentioned power-transmitting means to transmit motion to the movable bottom, a manually-operated member, means between the movable part and the manually-operated member for actuating the movable part to set the second-mentioned power-transmitting means and for preventing the transmission of motion from the movable part to the manually-operated member to move said member from its position assumed during the movement of the bottom by the second-mentioned power-transmitting means, said interposed means including dead-center-locking mechanism, and a cam on the movable bottom for forcing the manually-operated member from its position assumed during the forward movement of the movable bottom, substantially as and for the purpose set forth.

13. In a fertilizer-distributer, the combination of a movable bottom, a driving-axle, power-transmitting means connected to the movable bottom and to the driving-axle for feeding the bottom rearwardly, means for preventing the transmission of motion to the movable bottom from the power-transmitting means, power-transmitting means connected to the movable bottom and to the driving-axle for feeding the bottom forwardly, means connected to the second-mentioned power-transmitting means for preventing the transmission of motion thereby to the movable bottom, a movable part for setting the second-mentioned power-transmitting means to transmit motion to the movable bottom, a rocking lever having a crank-arm for actuating said movable part and locking the same in operative position, and a cam on the movable bottom for forcing the crank-arm from operative position, substantially as and for the purpose described.

14. In a fertilizer-distributer, the combination of a movable bottom, a driving-axle, a shaft connected to the movable bottom, power-transmitting means connected to the driving-axle and to the shaft for feeding the bottom rearwardly, means for preventing the transmission of motion to the shaft from the power-transmitting means, a power-transmitting member loosely mounted on the shaft, means for normally connecting the driving-axle to the power-transmitting member and revolving the same forwardly, a second power-transmitting member mounted on the shaft and normally revoluble therewith, means for preventing the transmission of motion from one power-transmitting member to the other, a movable part for operatively connecting the power-transmitting members, a substantially

upright lever having a substantially horizontal crank-arm for actuating the movable part, said crank-arm being movable into a plane forming essentially a continuation of a line extending lengthwise of the moveable part between the side edges thereof and thereby locking said movable part in position, and a cam on the movable bottom for forcing the crank-arm from operative position, substantially as and for the purpose specified.

In testimony whereof I have hereunto signed my name, in the presence of two attesting witnesses, at Syracuse, in the county of Onondaga, in the State of New York, this 21st day of January, 1903.

ROBERT LOVE.

Witnesses:
S. DAVIS,
D. LAVINE.